HX-SZ600-RGBW-24K

RF RGBW Controller with 24 key remote control

Before installing this product，Please read this manual carefully. Ensure full understanding of this specification to avoid unnecessary damage and additional costs.

RF 24 key Led RGBW Controller adopts the most advanced PWM (Pulse Width Modulation) digital technology with 4 channels constant voltage led RGBW controller. This model designed for RGBW/Y led products. Adopts RF 24 key remote, RGB and W each have independently control area without interference. Especially, it is designed with synchronization function. It is convenient to use RJ45 connector to connect the multiple controllers together, and achieve the synchronization function of thousands meters led strips. In theory, they can be connected numerous.

echnical Parameters:

Working temperature	-20-60℃
Supply voltage	DC12V~24V
Output gray	256 levels (with continuous reception)
Connecting mode	common anode
External dimension	L91*W88*H24 mm
Packing size	L106*W106*H66 mm
Net weight	180g
Gross weight	240g
0utput	4 channels
Output current	<8A(each channel)
Output power	12V:≤384W,24V:≤768W
RF frequency	433.92MHz

Product Features:

- Designed for RGBW constant voltage LED lights, Max.output:4*6A.
- Working voltage DC12-24V, it can be universal in this range.
- Adopts PWM digital technology, signal frequency: 400Hz.
- Multiple controllers can work synchronically when connected by network cable through the RJ45 connector, the network cable between 2 ports up to 80 meters.
- RF 24-key wireless remote, RF frequency: 433.92MHz.
- “W” channel can be turn on/off and adjust the brightness independently, and 3 brightness level hot keys.
- 13 kind modes for RGB part, including 9 static colors and 4 dynamic changes; the brightness of static color and the speed of dynamic changes are adjustable.
- Warranty of this product is three years, exclude the artificial situation of damaged or overload working.

External Dimension:

Interface Specifications

1. Power and load interface:

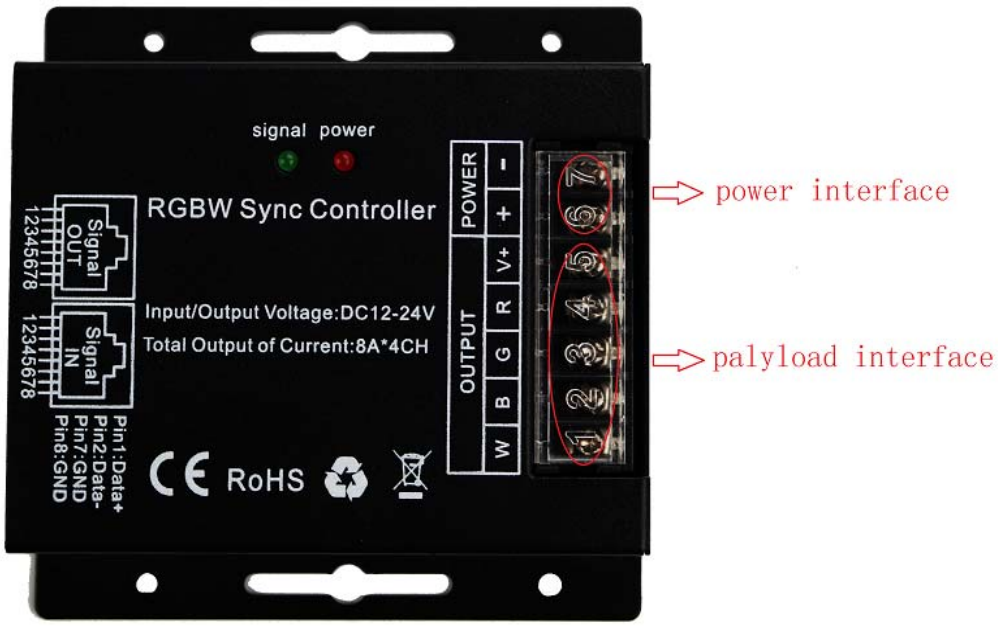

2. Synchronization function

Multiple controllers can work synchronically when connected by network cable through the RJ45 connector.

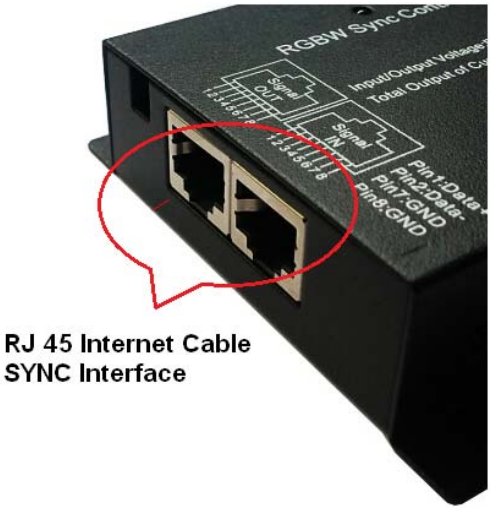

Direction for use:

Adopt RF wireless 24-key remote control, function of each button as below:：

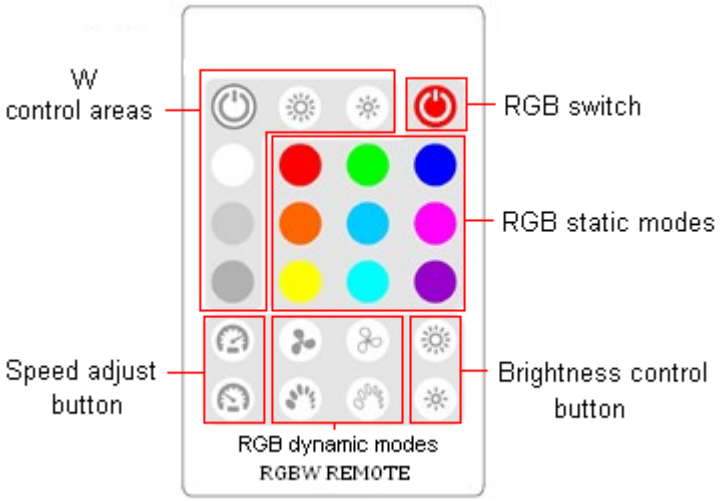

W on/off	W brightness +	W brightness -	RGB on/off
W 100%	Static red	Static green	Static blue
W 50%	Static orange	Static sky blue	Static carmine
W 25%	Static yellow	Static cyan	Static purple
Speed +	Three colors jump	Three colors gradually change	brightness +
Speed -	Seven colors jumping change	Seven colors gradually change	brightness -

RF CODE

Tips: Receiver can be controlled by any one the same remote as factory default; full touch remote control delive red with unique RF code as factory default; if unique-control is needed, please matching the code before installat ion and using.

Matching code operation

If new-coded-remote is needed, re-pairing the remote and the receiver before using as below operation instruction:

1. **Step 1**: Pressing key “Seven colors gradually change” and hold on, power on the controller, the load LEDs will be 50% brightness white as responding.
2. **Step 2**: Continuously to press the key “Seven colors gradually change “ for 3 times with in 5 seconds after step 1 ,the brightness of LEDs will change from 50% -10% -flashes 3 times and return to the initial state.
3. Code learning successfully, the LEDs will be back to the state before the power off, and the receiver can control by the remote.
4. If not, please re-operate from step 1 to 2.

Clear code operation

Back to factory default, wall-panel can be controlled by any one the same remote control.

1. **Step 1**: Pressing key “Seven colors jumping change” and hold on, power on the controller, the load LEDs will be 50% brightness white as responding.
2. **Step 2**: Continuously to press the key “Seven colors jumping change “ for 3 times with in 5 seconds after step 1 ,the brightness of LEDs will change from 50% -10% -flashes 3 times and return to the initial state.

3. Code learning successfully, the LEDs will be back to the state before the power off, and the receiver can control by the remote.
4. If not, please re-operate from step 1 to 2.

Typical Applications：

Application Circuit 1:

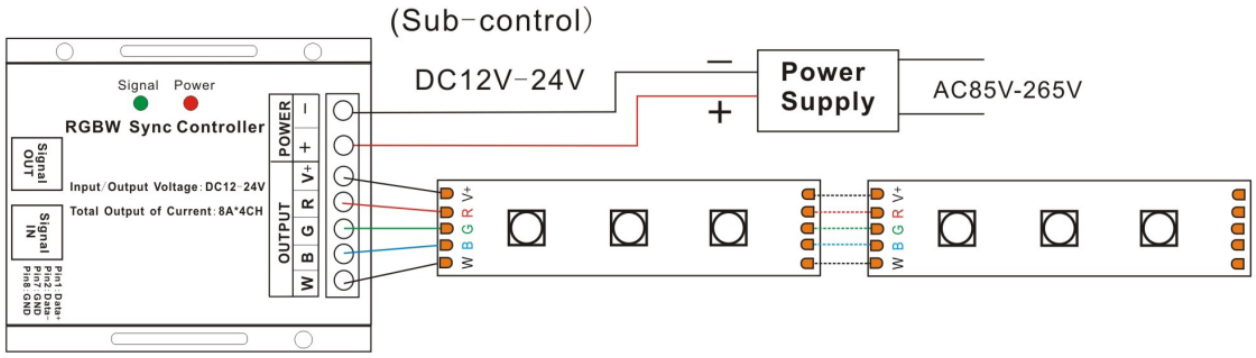

Application Circuit 2: （Synchronization function with network cable）

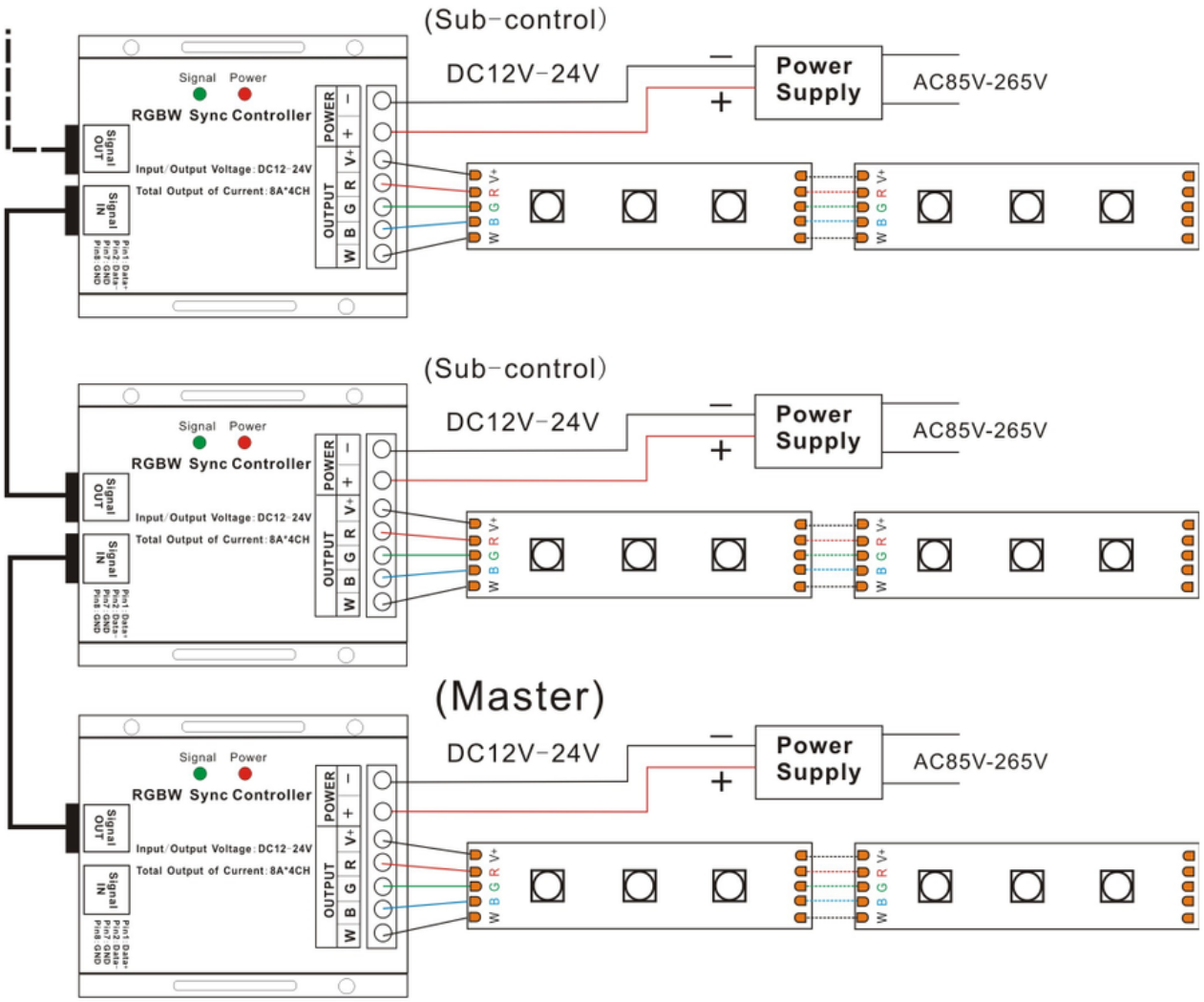

Tips: The green signal indicator light will uniform flash with proper communication, and will off with any incorrect signal connection (like: poor contact, confused input and output, wrong wire order).

Warning

1. Supply voltage of this product is DC12-24V, never connect to other voltage.
2. Before power on, please make sure the wires are connected correctly according to connecting diagram. Or (like: short-circuit connection, positive-negative reverse) will damage the device.
3. Warranty of this product is three years, but exclude the artificial situation of damaged or overload working.